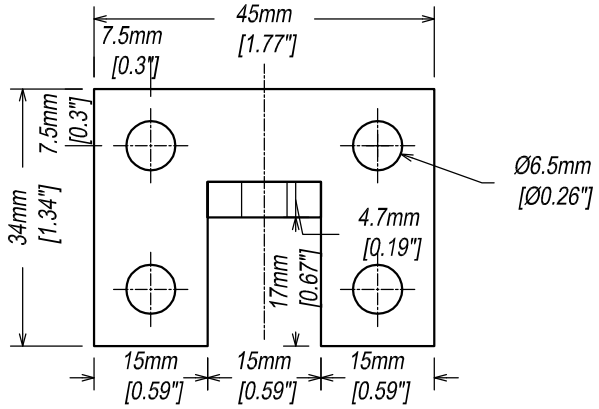

1 TOP
Scale: 1:1

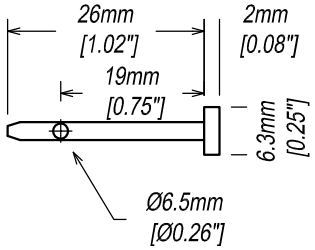

4 ??
Scale: 1:1

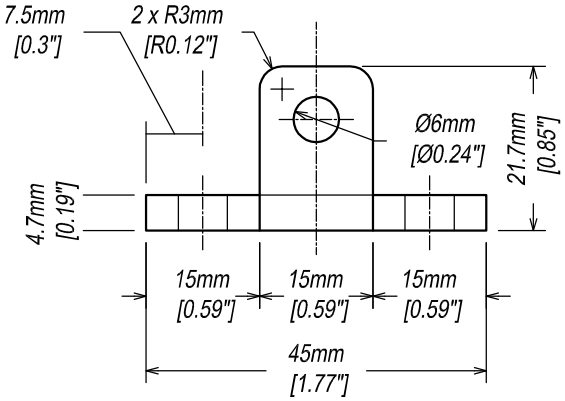

2 FRONT
Scale: 1:1

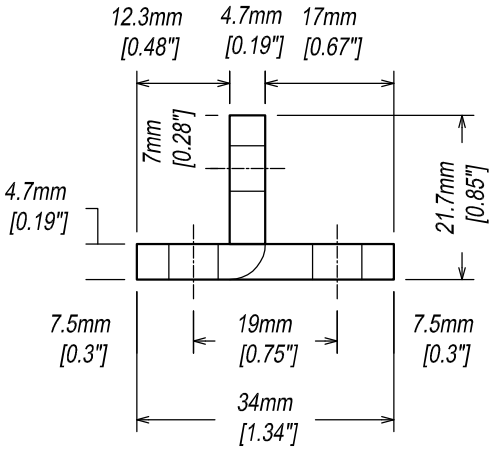

3 SIDE
Scale: 1:1

NEW BRACKET DESIGN

Firgelli Automations
3888 Sound Way
Bellingham WA 98227 USA

T: +1 360 450 5181
F: +1 866 226 1649